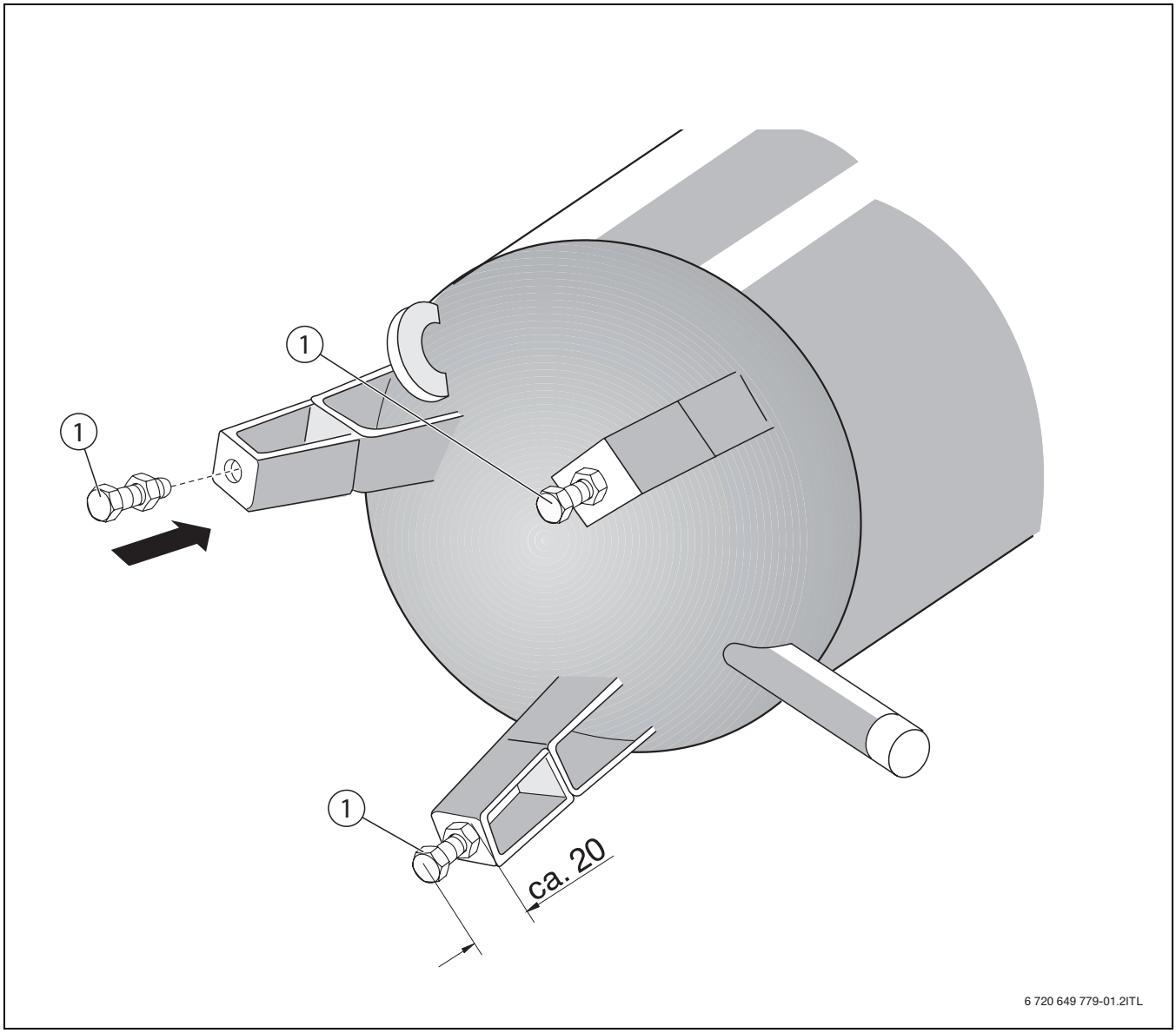

1